Mobiles Whiteboard MAULstandard, drehbar

645 92, 645 93, 645 94, 645 95, 645 96,
646 02, 646 03, 646 04, 646 05, 646 06

6459309.150F

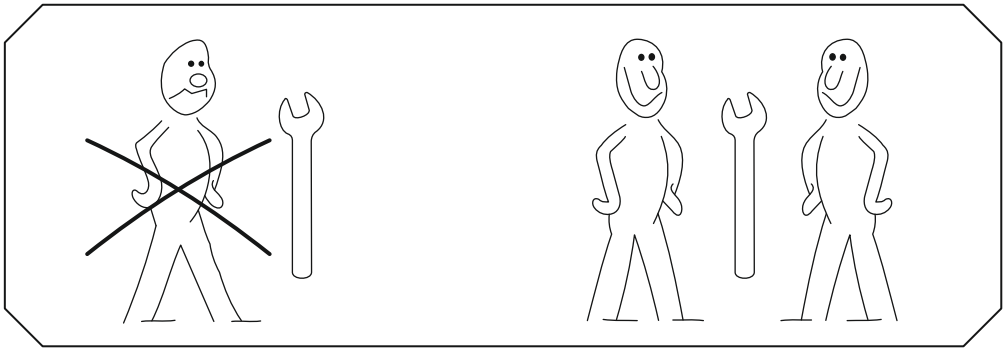

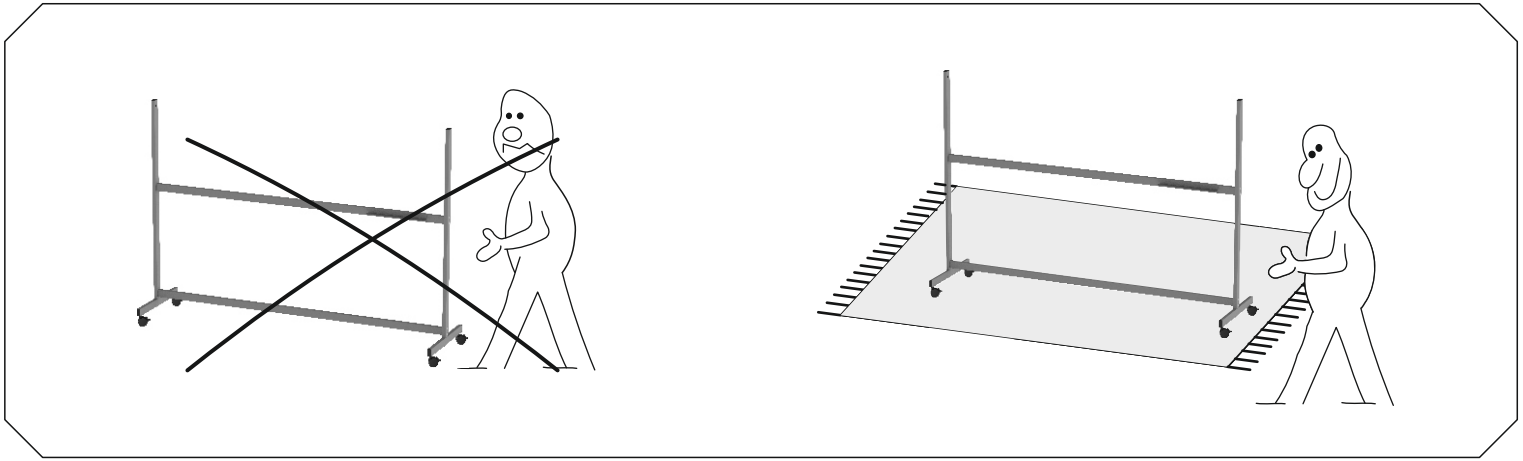

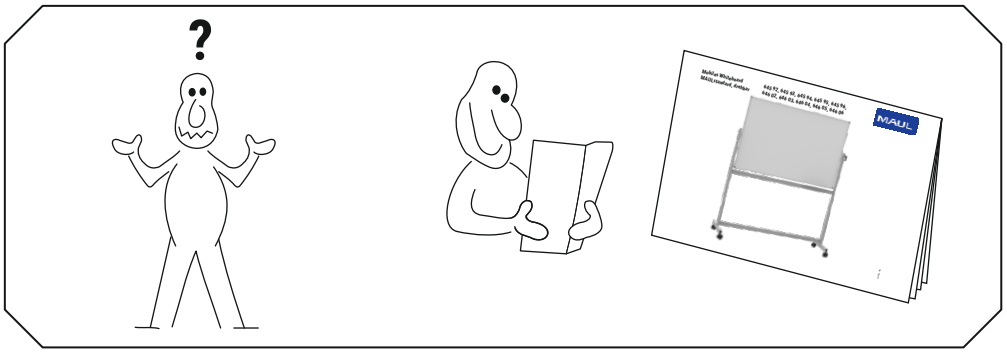
?
MAUL

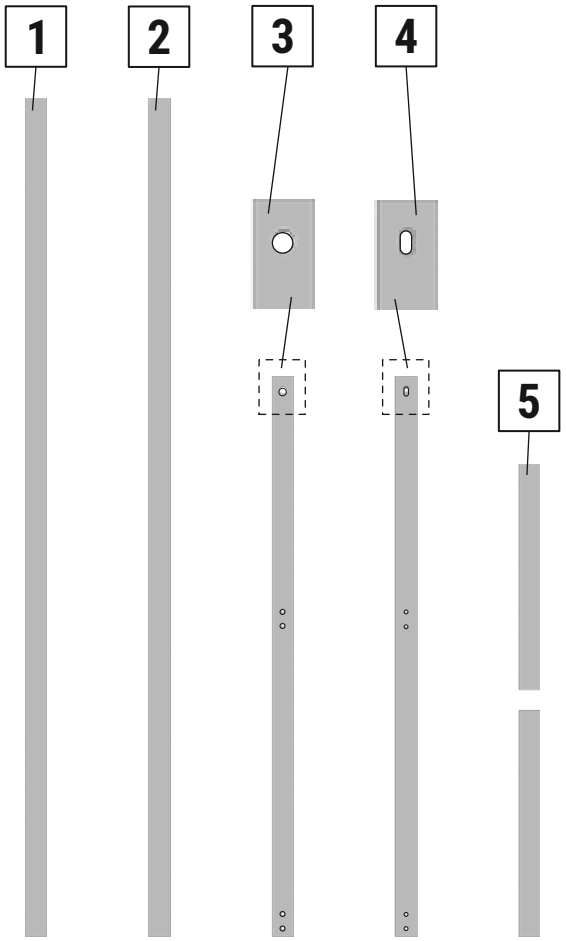
1
2
3
4
5
1 x
1 x
1 x
1 x
2 x

6
1 x

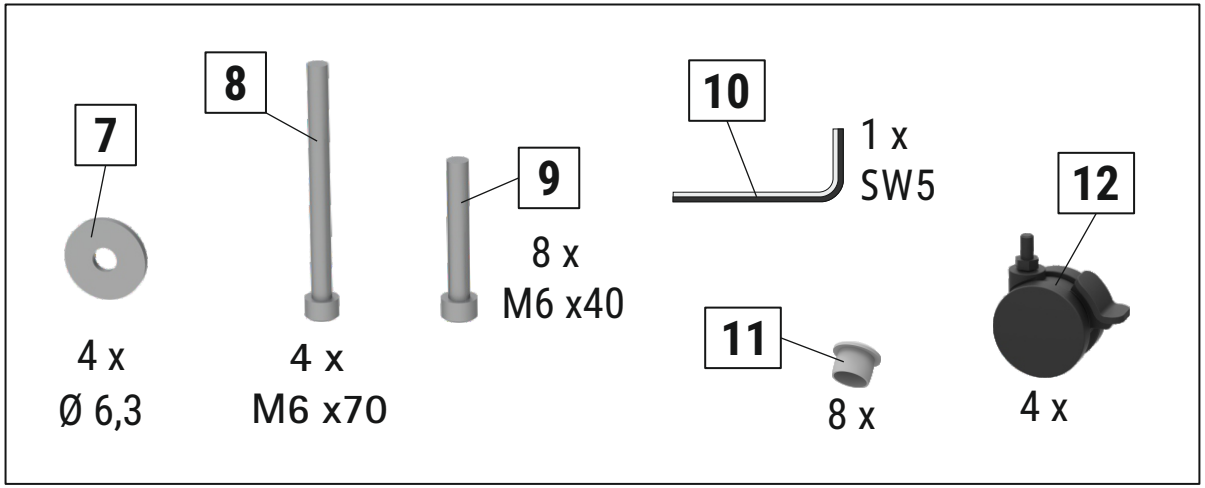
7
4 x
Ø 6,3
8
4 x
M6 x70
9
8 x
M6 x40
10
1 x
SW5
11
8 x
12
4 x

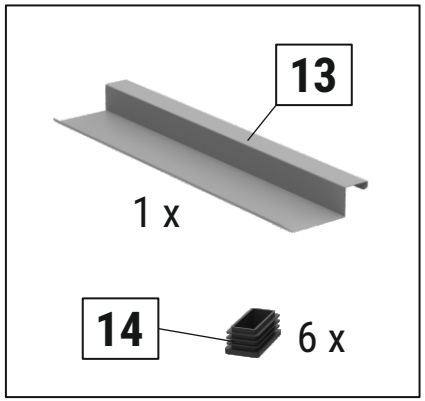
13
1 x
14
6 x

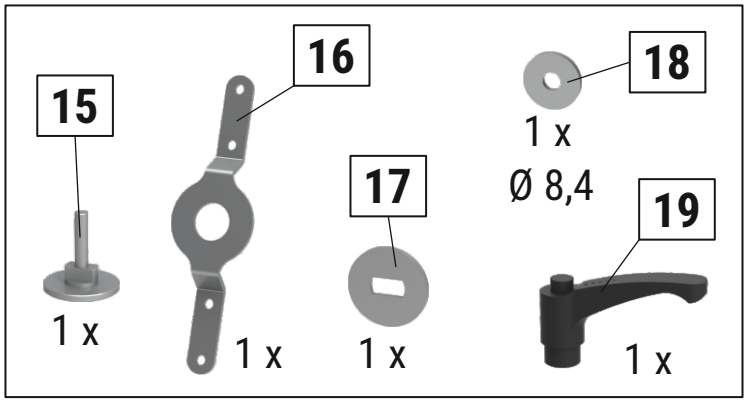
15
1 x
16
1 x
17
1 x
18
1 x
Ø 8,4
19
1 x

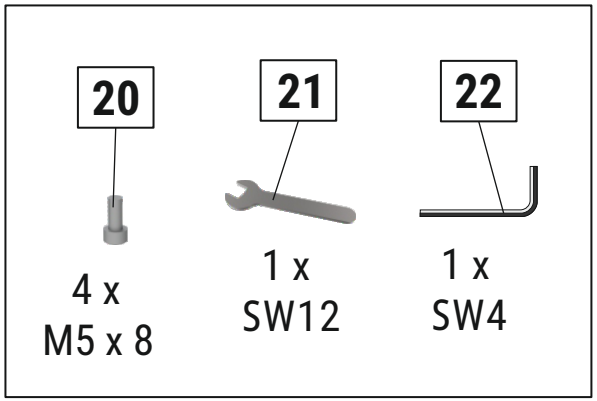
20
4 x
M5 x 8
21
1 x
SW12
22
1 x
SW4

1

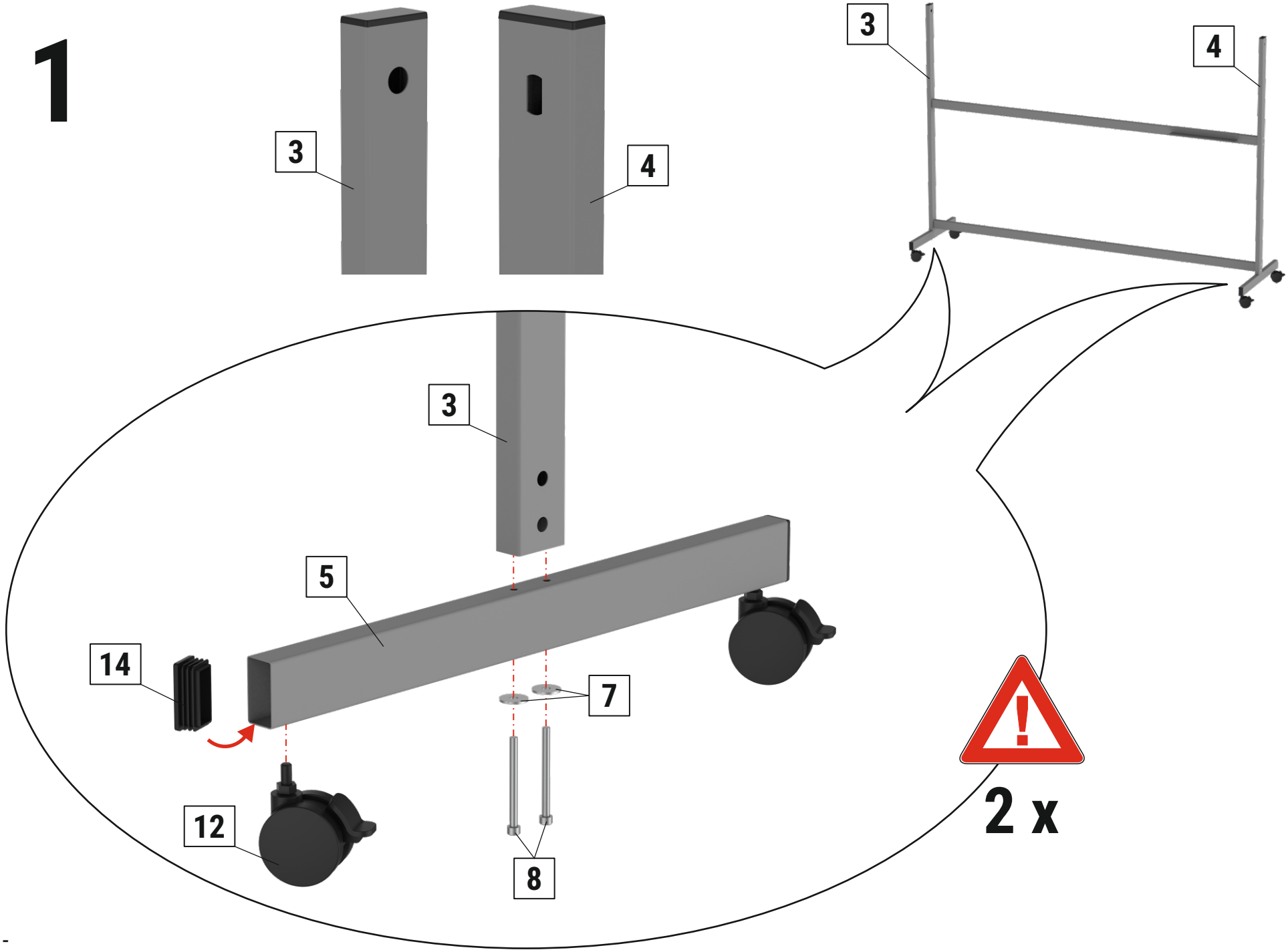

2

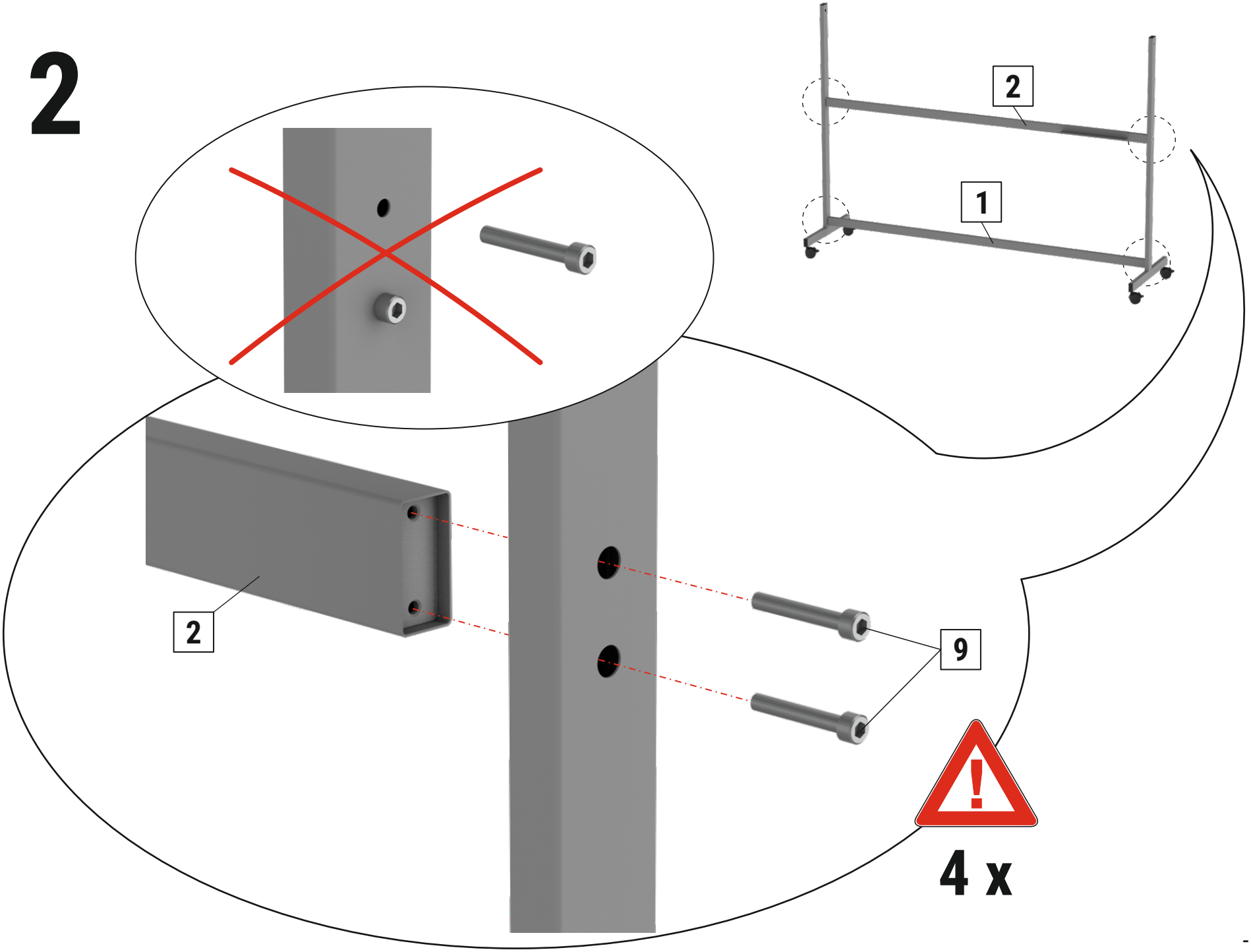

3

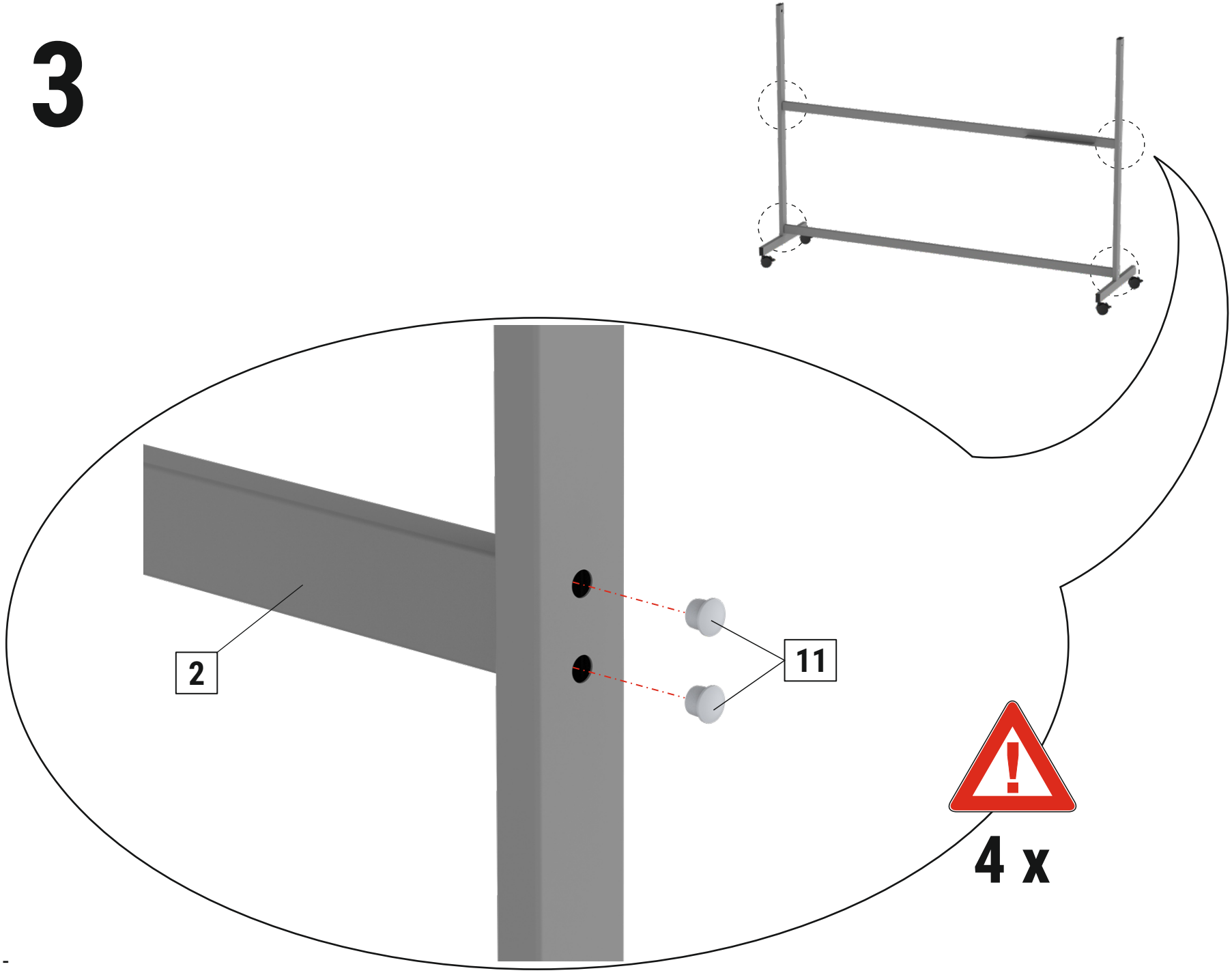

4

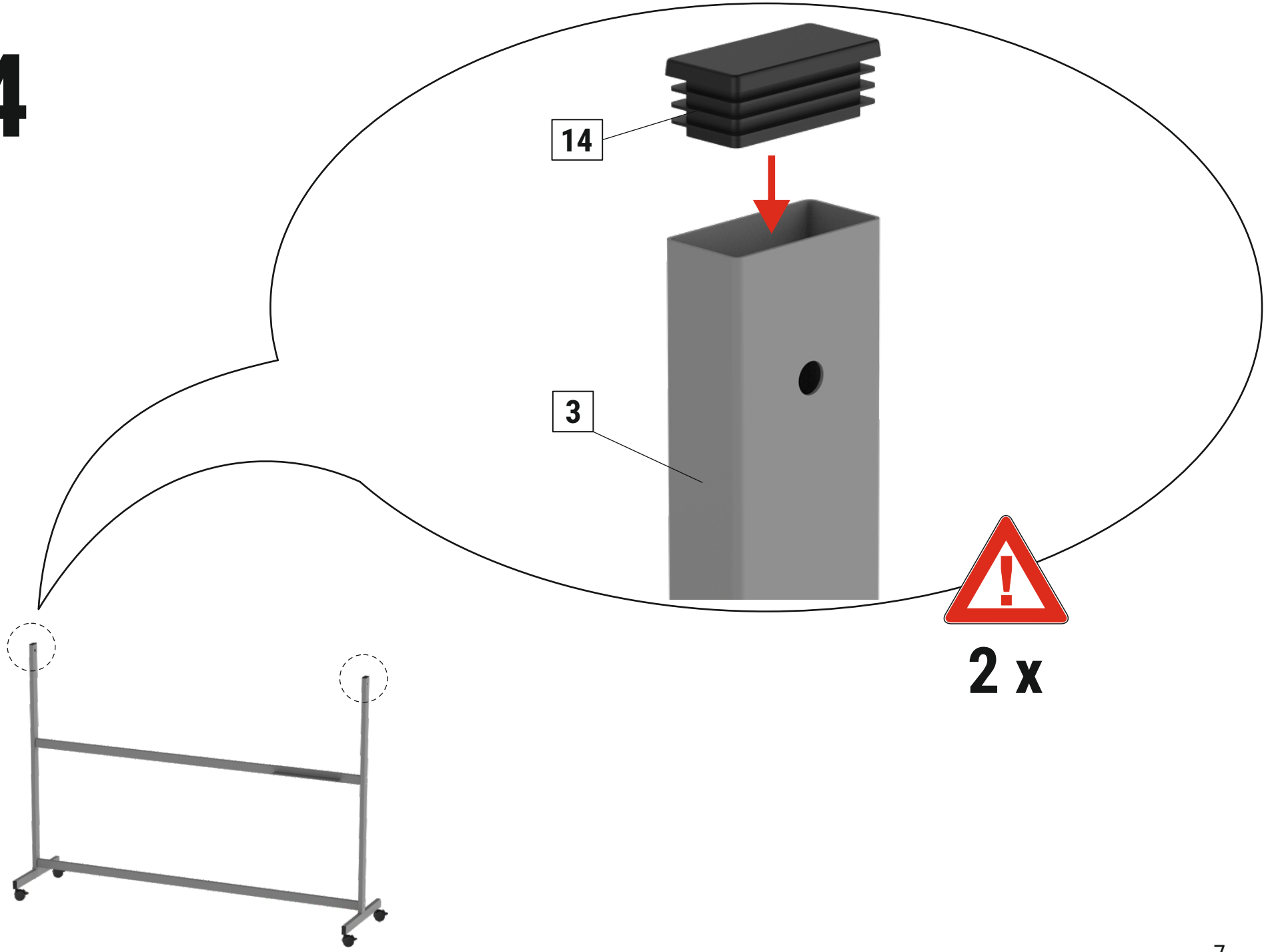

5

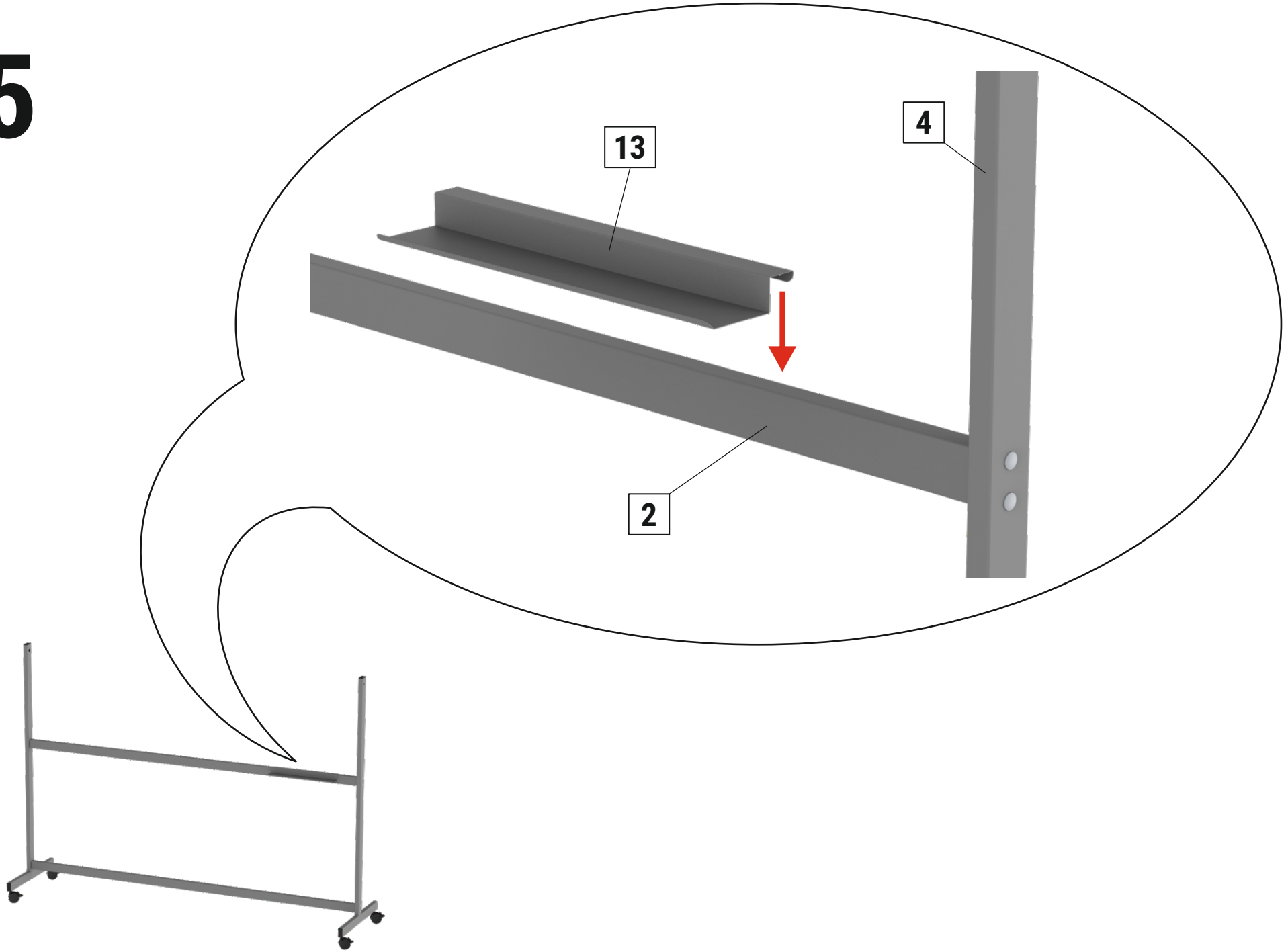

6

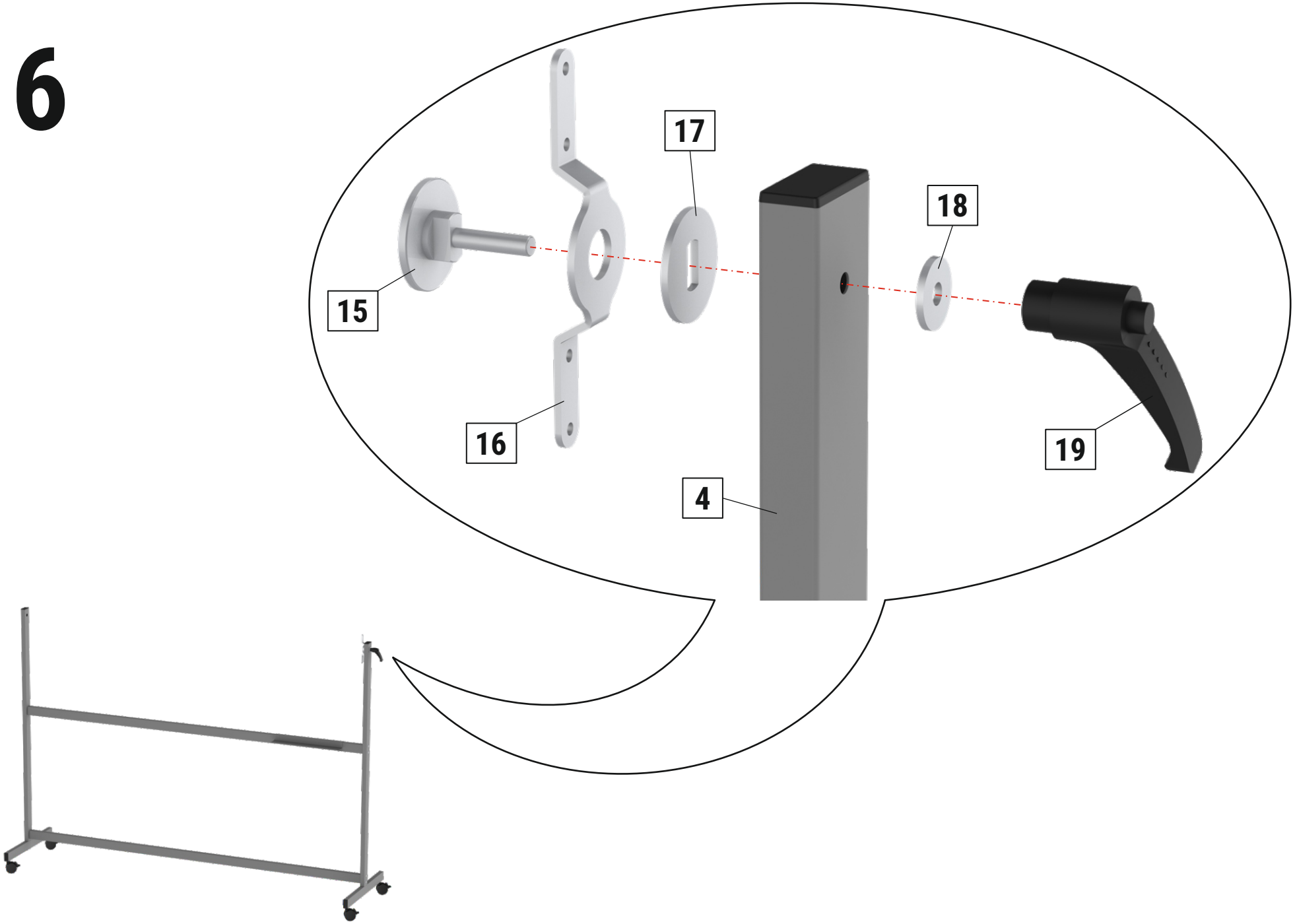

7

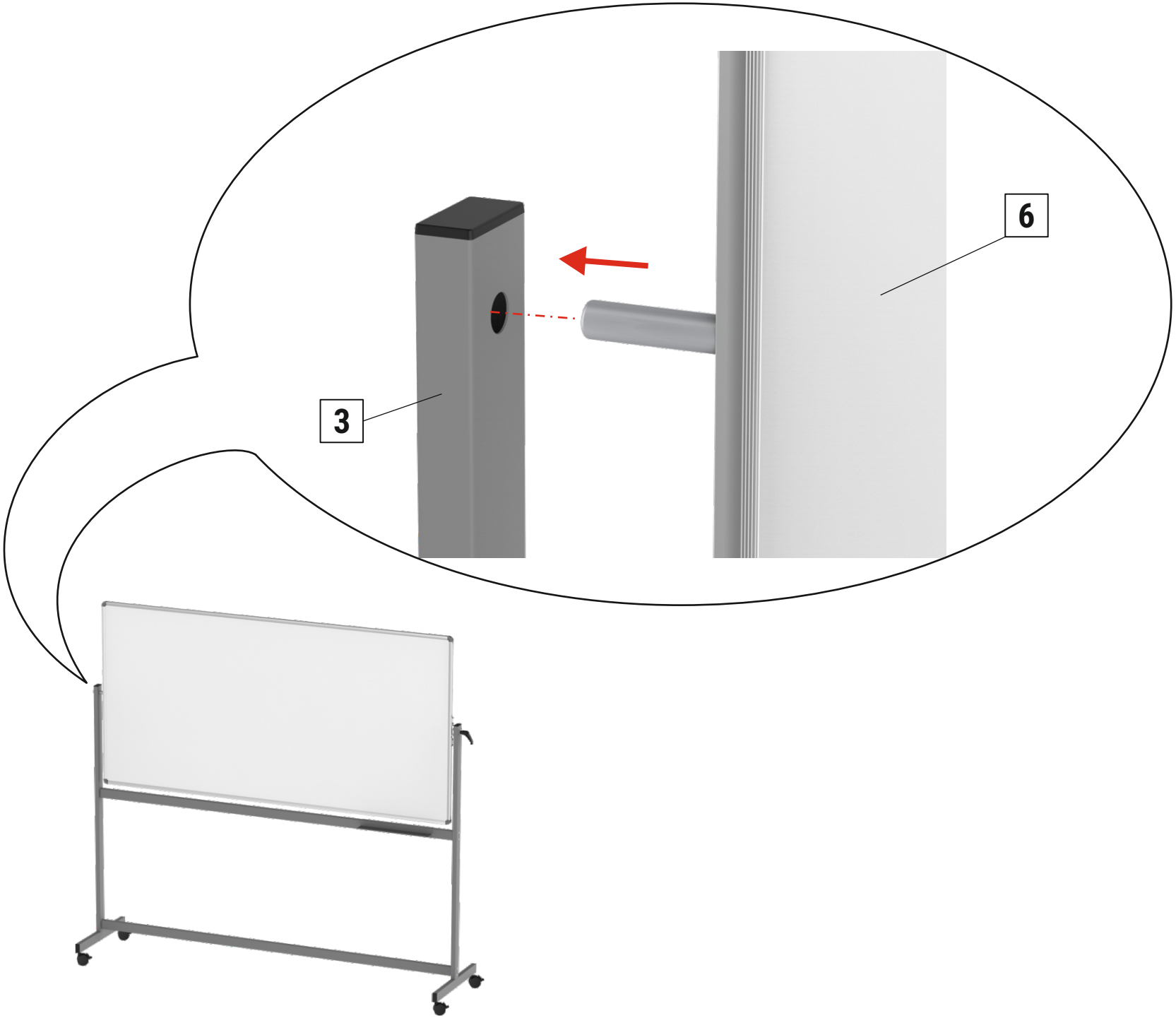
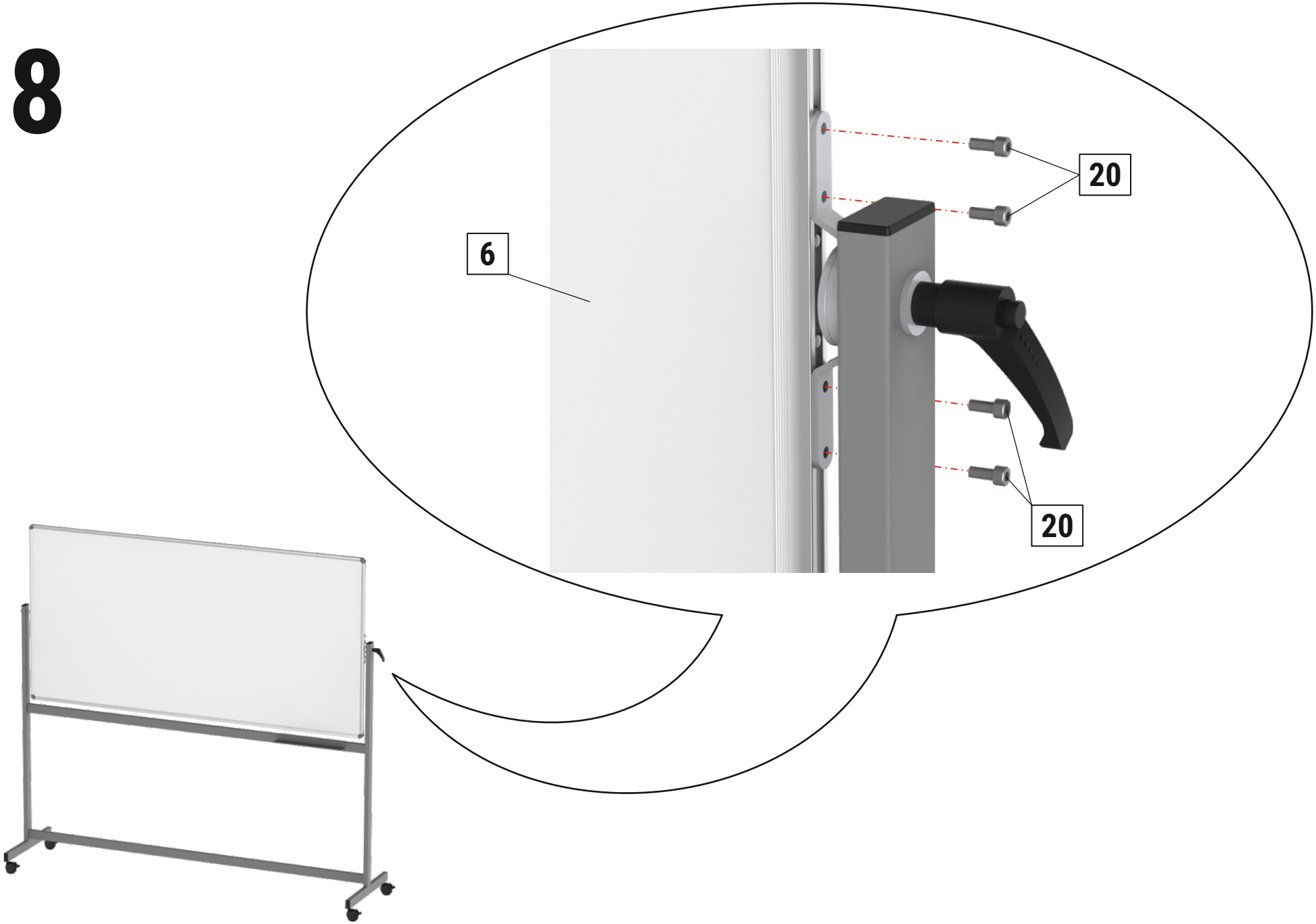
8