MAULstudy 823 04

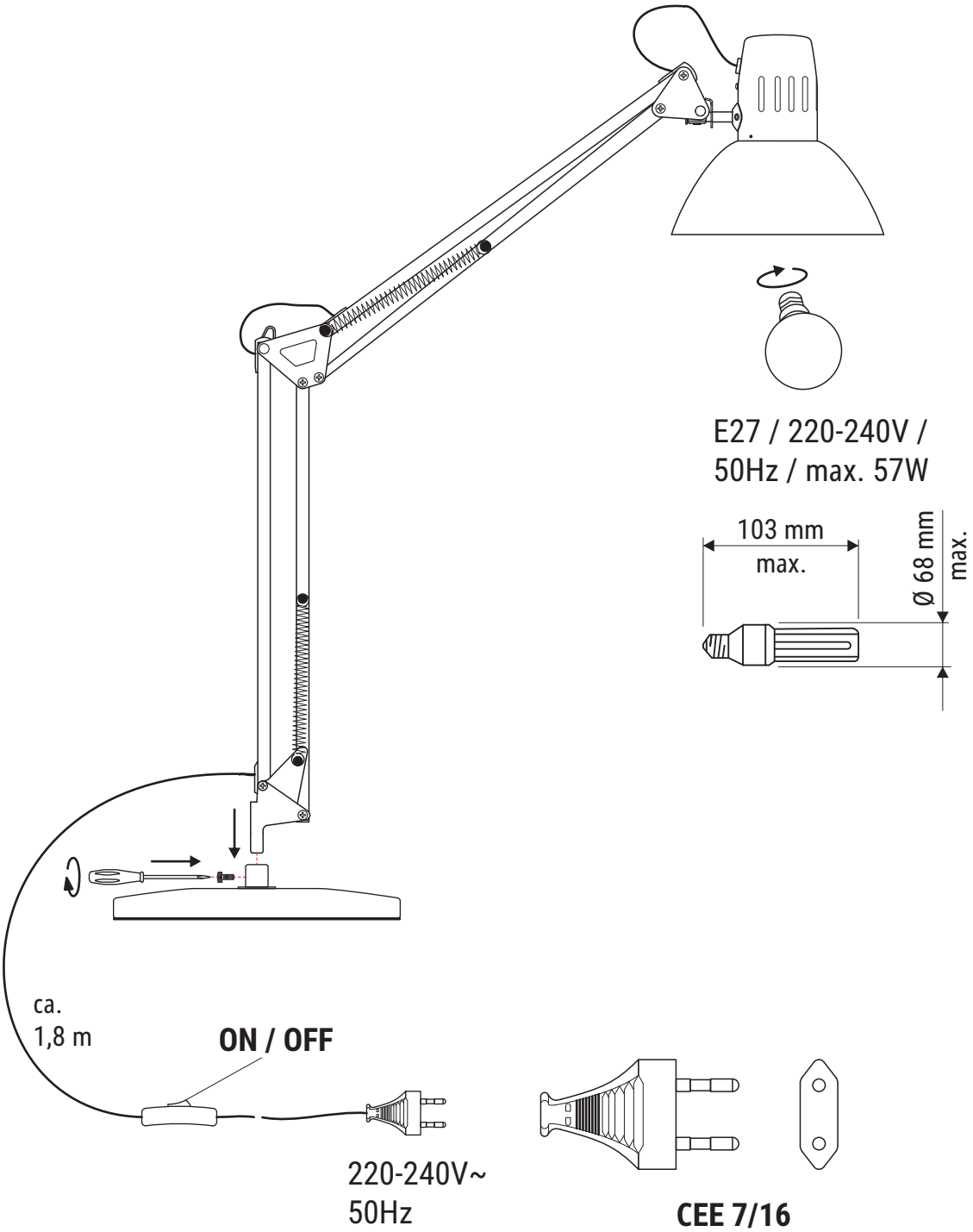

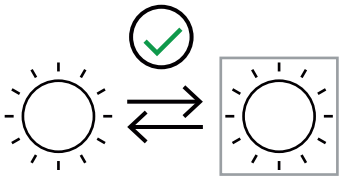

www.maul.de

0.5m

8230409.150